part number structure

example **SSP 4 AM-2-T1-200-P/CU**

- specification: **SSP** AM : standard; **SSPS** AM : anti-corrosion
- nominal diameter
- number of nuts attached to one shaft
- preload symbol: **blank** : standard; **T1** : light
- spline shaft total length
- accuracy grade: **blank** : high; **P** : precision
- with special specification

SSP(S)4AM does not come with side-seals.

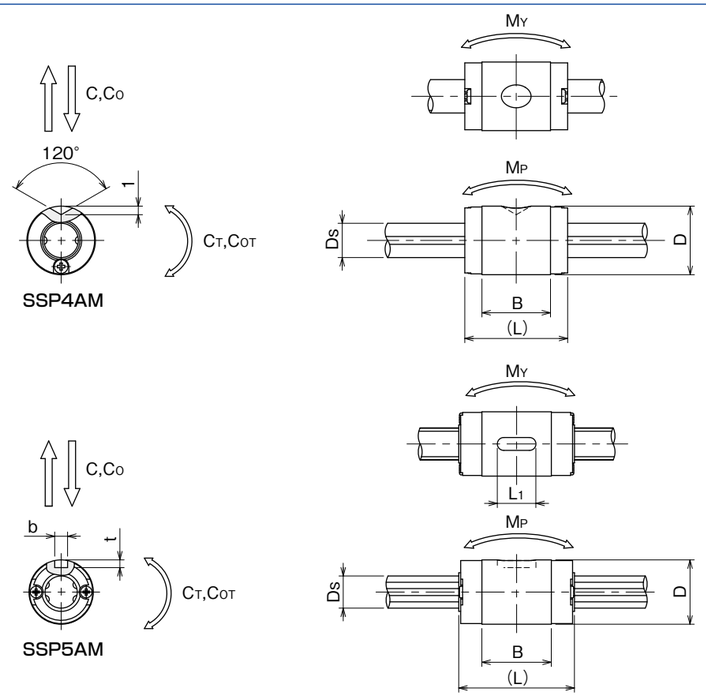

part number		major dimensions										basic torque rating		basic load rating		allowable static moment		mass		size
		D h6		L	B	b		t	L1	Ds h7		dynamic	static	dynamic	static			nut	shaft	
standard	anti-corrosion	mm	tolerance μm	mm	mm	mm	tolerance μm	+0.05 0 mm	mm	mm	tolerance μm	CT N·m	COT N·m	C N	CO N	MP N·m	MY N·m	g	g/100mm	
SSP 4AM	**SSPS 4AM**	8	0 −9	12	8	—	—	—	—	4	0 −12	0.72	1.01	315	439	0.60	1.04	2.5	9.7	4AM
SSP 5AM	**SSPS 5AM**	10		18	10.8	2	+14/0	1.2	6	5		2.33	4.05	826	1,160	2.10	2.56	5.1	14.9	5AM

NIPPON BEARING CO., LTD.
2833 Chiya,Ojiya-city,Niigata-pref.,947-8503 JAPAN
Phone : +81-258-82-0011 FAX : +81-258-81-1135
Overseas direct call : +81-258-82-5709
http://www.nb-linear.co.jp

NB Corporation of America
930 Muirfield Drive,
Hanover Park, IL 60133, U.S.A.
Phone : (630) 295-8880
FAX : (630) 295-8881
TOLL FREE : (800) 521-2045
http://www.nbcorporation.com
info@nbcorporation.com

Western Regional Office
46750 Lakeview Blvd. Fremont,
CA 94538, U.S.A.
Phone : (510) 490-1420
FAX : (510) 490-1733
TOLL FREE : (888) 562-4175

Eastern Regional Office
41 Orchard Street, Ramsey,
NJ 07446, U.S.A.
Phone : (201) 236-3886
FAX : (201) 236-5112
TOLL FREE : (800) 981-8190

NB Europe B.V.
Boekweitstraat 21, 2153
GK Nieuw-Vennep,
The Netherlands
Phone : +31 (0) 252-463-200
FAX : +31 (0) 252-463-209
http://www.nbeurope.com
info@nbeurope.com

Reproduction Prohibited

Specifications are subject to change without notice. No.6540 First Edition: September 7, 2012

NB

NEW

BALL SPLINE

SSP-AM type

LIGHT & COMPACT NUT REALIZING SMOOTH MOVEMENT

NIPPON BEARING CO., LTD.

NB BALL SPLINE

SSP-AM type

STRUCTURE AND ADVANTAGES

The NB ball spline SSP-AM type has a smaller spline-nut diameter compared to the conventional SSP type nut on the same shaft diameter. The SSP-AM type is best suited for the chip-mounter head device and the multiaxial applications. Anti-corrosion type is also available.

Figure 1 Structure and Advantages of SSP-AM type

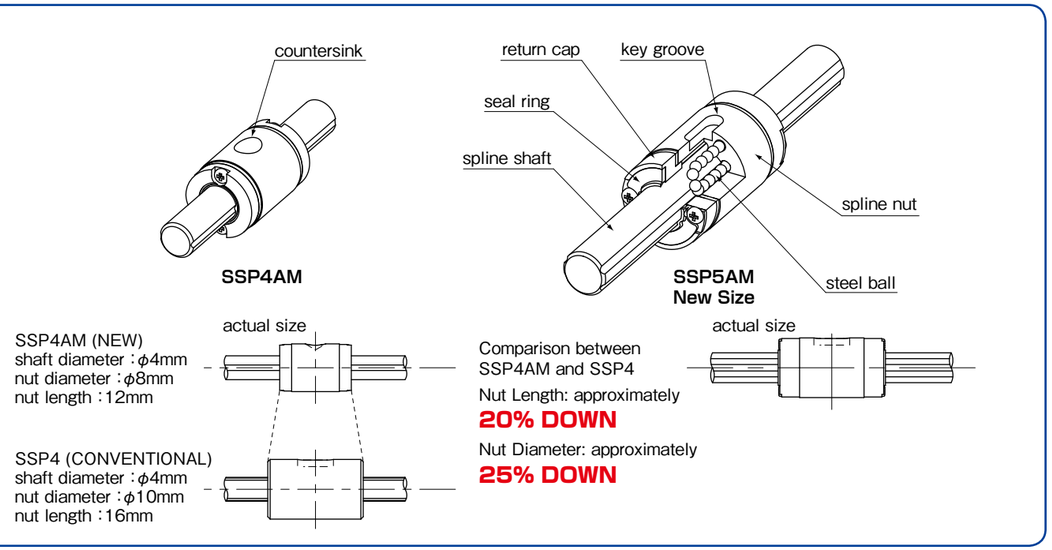

MOUNTING METHOD

- ●A Set of Spline Nut and Spline Shaft
  Please make sure to align the NB marks when inserting a nut to a shaft.
- ●Fit between Spline Nut and Housing
  The transition fit (J6) is selected for a high accuracy application.
  The clearance fit (H7) is selected if high accuracy is not required.
- ●Insertion of Spline Nut
  When inserting a spline nut into the housing, carefully insert the nut so as not to hit the return cap or seal ring.
- ●How to Fix the Spline Nut
  To fix the SSP4AM nut, as Figure 2 shows, please use M2 screw.
  Please pay attention not to over-tighten the screw.
  While tightening, make sure of the nut smooth movement by stroking the shaft.
  To fix the SSP5AM nut, please use either the provided key, a retaining ring or a push plate.

Figure 2 Mounting of SSP4AM and SSP5AM

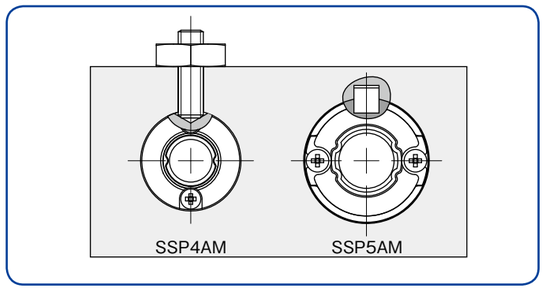

Figure 3 Key

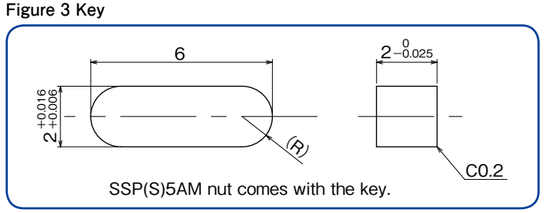

ACCURACY

The NB ball spline is measured for accuracy at the points shown in Figure 4.

Figure 4 Accuracy

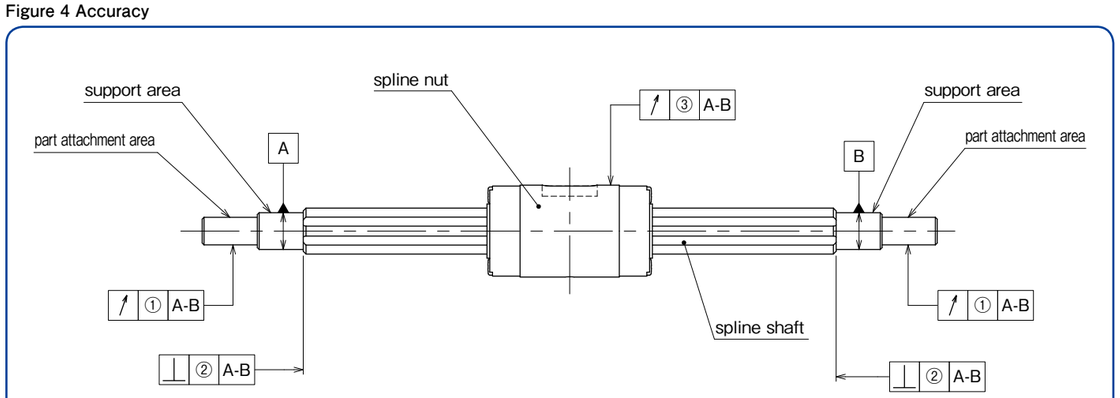

Note: The support area is the portion where, for example, radial bearings are attached in order to support the spline shaft.
The part attachment area is the portion to which other parts, such as gears, are attached.

Table 1 Tolerance of Spline Shaft Groove Torsion (Max.)

accuracy grade	high	precision (P)
tolerance	13μm/100mm	6μm/100mm

The groove torsion is indicated per 100mm, arbitrarily set as the effective length of the spline shaft section.

Table 2 Tolerance Relative to Spline Support Area (Max.) unit : μm

part number	①radial runout of part attachment area		②perpendicularity of the end of the spline shaft section (when grinding is requested on the drawing)	
	high-grade	precision-grade (P)	high-grade	precision-grade (P)
SSP 4AM	14	8	9	6
SSP 5AM				

Table 3 ③Radial Runout of Outer Surface of Spline Nut Relative to Spline Support Area (Max.) unit : μm

spline shaft total length (mm)		part number			
		SSP4 AM		**SSP5 AM**	
greater than	or less	high-grade	precision-grade (P)	high-grade	precision-grade (P)
—	200	46	26	46	26
200	315	89	—	89	57
315	400	—	—	126	—

PRELOAD AND CLEARANCE IN ROTATIONAL DIRECTION

Table 4 Preload and Clearance in Rotational Direction unit : μm

part number	standard	light (T1)
SSP 4AM	0~+3	−3~0
SSP 5AM		

Table 5 Operating Conditions and Preload

preload	symbol	operating conditions
standard	blank	minute vibration is applied. a precise motion is required. a torque is applied in a given direction.
light	T1	slight vibration is applied. slight torsional load is applied. cyclic torque is applied.